ENGINE, THROTTLE PEDAL - Z26NEY99A4/B4/A6/B6 (C703120)

2026 RZR - RZR XP S 1000 ULTIMATE (R01) - Z26NEY99A4/B4/A6/B6

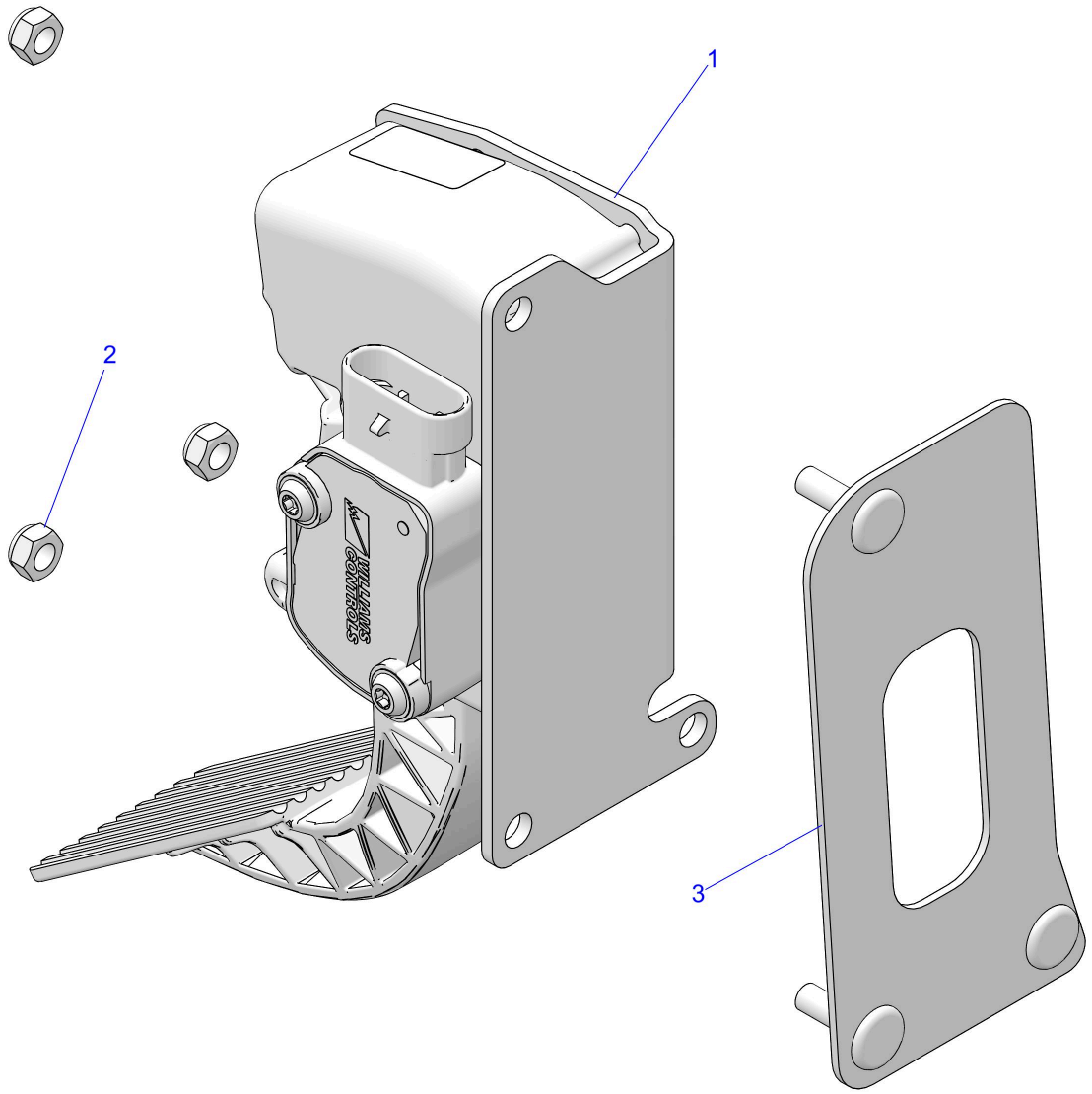

© 2021 Polaris Industries Inc. C703120

Reference #	*Part#*	*Description*	*Quantity*
1	4082626	PEDAL-ELECTRONIC THROTTLE	1
2	7546703	NUT-6MM X 1 NYLOK-Z	3
3	5267613-329	BRKT-MNT,THROTTLE PEDAL,ECOAT	1

Copyright 1996-2026 Polaris Industries U.S.A All rights reserved.